Midpeninsula Regional
Open Space District

R-25-21
Meeting 25-04
February 12, 2025

AGENDA ITEM 5

AGENDA ITEM

Addendum to the Ravenswood Bay Trail Memorandum of Understanding with the City of East Palo Alto to distribute installation and operational obligations related to a new San Francisco Bay Trail public access entrance via Rutgers Street

GENERAL MANAGER'S RECOMMENDATION

Authorize an addendum to the Ravenswood Bay Trail Memorandum of Understanding with the City of East Palo Alto addressing the installation, maintenance and operation of a new Rutgers Street entrance point to the San Francisco Bay Trail to enhance access for adjacent East Palo Alto residents.

SUMMARY

On February 28, 2024, the Midpeninsula Regional Open Space District (District) Board of Directors (Board) approved a new public access point to the San Francisco Bay Trail (Bay Trail) in Ravenswood Open Space Preserve (Preserve) at the end of Rutgers Street in the City of East Palo Alto (City). The General Manager recommends approving an addendum to the current Bay Trail Memorandum of Understanding (MOU) to cover the division of responsibilities for construction and maintenance of an entry gate at the end of Rutgers Street. The addendum proposes a 50% cost share with the City for the entrance improvements and for the District to take responsibility of maintaining the pedestrian gate improvements and the City to be responsible for city infrastructure leading to the gate from the adjacent neighborhood, including the street and sidewalks. Agreement on the MOU is required before construction can begin on the new entrance gate.

BACKGROUND

There is currently no public access at the end of Rutgers Street to enter the Preserve. Access is blocked by a chain link fence and vehicle gate. Rutgers Street ends at the property boundary with San Francisco Public Utilities Commission (SFPUC) lands over which the District has a trail easement for the Bay Trail between University Avenue and the Preserve. The trail easement runs directly outside the vehicle gate at the end of Rutgers Street. The easement held by the District over SFPUC lands states, "*Holder shall install and operate gates as needed in SFPUC's reasonable judgement for safety and security purposes, which shall include a gate at each end of the Public Trail*". The current gates and proposed automated pedestrian gate open at 5 AM and close at 10 PM consistent with the Preserve Bay Trail hours which are extended to allow for commuter bicycle use of the Bay Trail.

The District executed a Memorandum of Understanding (MOU) with the City on July 31, 2019 regarding the management of the Bay Trail. On February 28, 2024 (R-24-26), the Board approved adding a new trail entrance at the end of Rutgers Street. The District and City staff agreed to share funding of the plans required for final SFPUC approval and for construction of the gate.

DISCUSSION

The current MOU describes the existing responsibilities for the District and City covering the Bay Trail. The proposed addendum to the MOU will define the responsibilities for the installation and maintenance of the new gate and entrance. A District consultant prepared the plans for the new entrance gate. The cost of that contract will be shared with the City. The City, SFPUC, and the District have agreed on the entrance design. Under the proposed addendum, the City and the District will evenly split the cost of the gate and entrance installation. Following project completion, the District will be responsible for the maintenance of the gate and entrance consistent with the other two entry gates and the Bay Trail segment through the SFPUC easement. The City will remain responsible for the City sidewalk leading to the gate entrance as well as any parking signage or parking enforcement in the surrounding neighborhood.

FISCAL IMPACT

This recommendation action has no direct fiscal impact. Staff will return with a contract for the construction of the entrance gate at a later date. There is sufficient funding in the FY25 budget to cover the cost of the construction of the entrance gate. Implementation of capital improvements (e.g., construction of the new entrance) is eligible for Measure AA reimbursement. This project supports Measure AA Portfolio 2: *Regional Bayfront Protection and Public Access Partnerships*. Implementation costs for the project are estimated to be $80,000 to $100,000 to design (completed) and install a new automated trail gate at the end of Rutgers Street and post regulatory and trail signage at the new entrance. The District and the City have agreed to share the installation costs. This does not include any street or sidewalk improvement costs, which would be borne by the City.

PRIOR BOARD AND COMMITTEE REVIEW

November 16, 2016: Board accepted a public trail easement from the City and County of San Francisco, amended the Ravenswood Use and Management Plan for a public trail easement and approved an MOU with the City to manage the trail. (R-16-146, minutes)

February 28, 2024: The Board approve the creation of a new public access point for the Bay Trail and Ravenswood Open Space Preserve at the end of Rutgers Street. (R-24-26, minutes)

PUBLIC NOTICE

Public notice was provided as required by the Brown Act. Notice was provided to neighbors in the University Avenue neighborhood.

CEQA COMPLIANCE

Replacement of a section of existing chain link fence with an automated trail gate at the end of Rutgers Street, East Palo Alto is exempt in accordance with State CEQA Guidelines Section 15301, Existing Conditions, and Section 15304, Minor Alterations to Land.

NEXT STEPS

If approved by the Board, the General Manger will execute the addendum to the MOU. The District will install a gate at the end of Rutgers Street and regulatory and trail signage at the new entrance. The trail access point will be added to the Preserve map.

Attachments

1. Map of Rutgers Street public access trailhead
2. Proposed Addendum to the MOU

Responsible Department Head:
Ana Maria Ruiz, General Manager

Prepared by:
Brian Malone, Assistant General Manager

Contact person:
Brian Malone, Assistant General Manager, General Manager Office

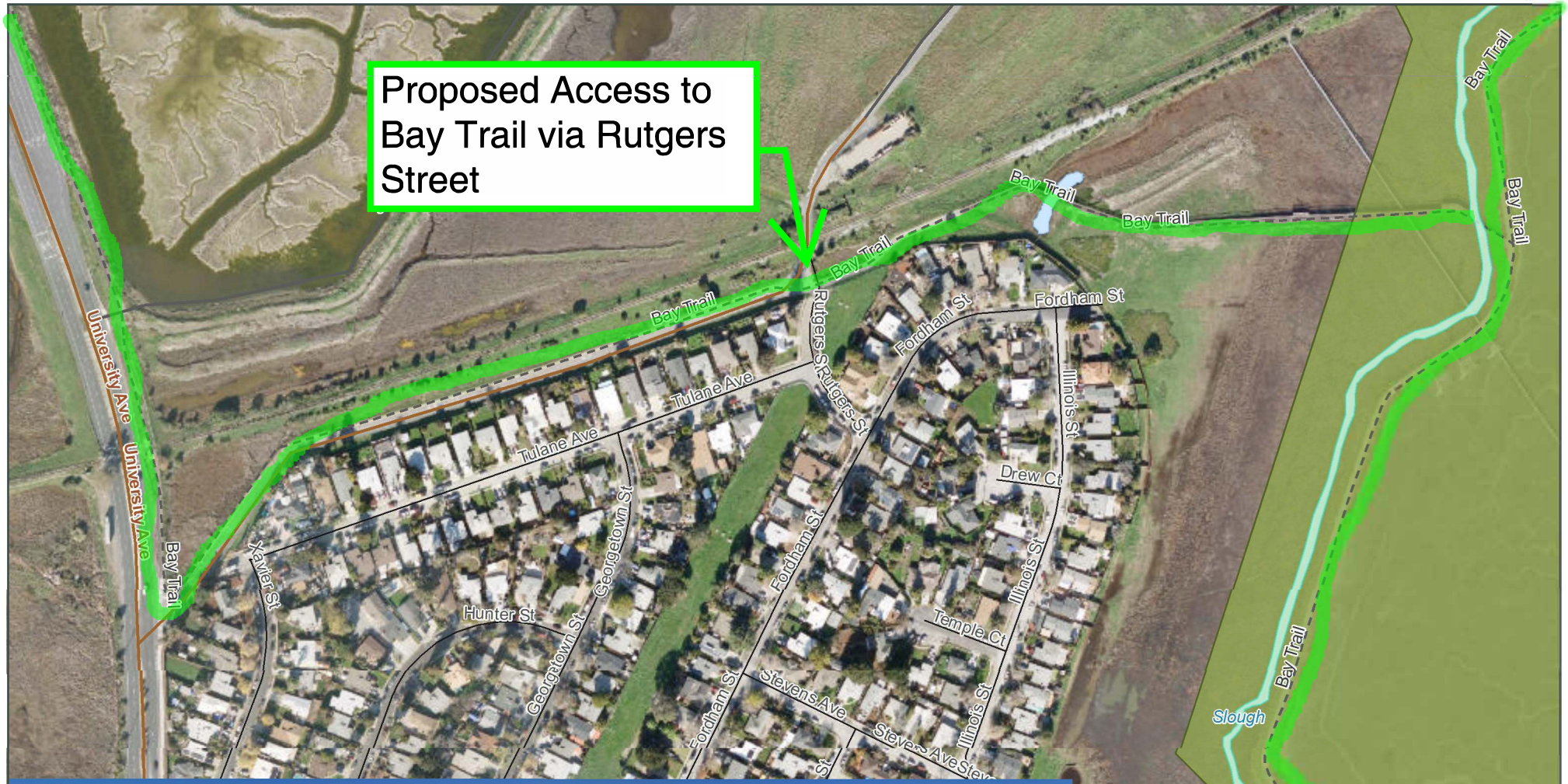

Midpeninsula Regional Open Space District (MROSD)
2/1/2024

mi 0 0.05 0.1

Data Source(s): Source: Esri, Maxar, Earthstar Geographics, and the GIS User Community

Web AppBuilder for ArcGIS

While the District strives to use the best available digital data, these data do not represent a legal survey and are merely a graphic illustration of geographic features.

ATTACHMENT 2

RAVENSWOOD BAY TRAIL
ADDENDUM TO MEMORANDUM OF UNDERSTANDING

This Addendum to the Ravenswood Bay Trail Memorandum of Understanding ("Addendum") is entered into by and among the City of East Palo Alto, a municipal corporation ("EPA"), and the Midpeninsula Regional Open Space District, a public district under the laws of California ("District"). For purposes of this Addendum, each of CITY and DISTRICT may be individually referred to as a "Party," and collectively as the "Parties." This Addendum shall be effective _____, 2025 ("Effective Date").

RECITALS

WHEREAS, District and City executed that certain Memorandum of Understanding dated July 31, 2019 ("MOU") addressing their collaboration and cooperation in connection with the San Francisco Bay Trail ("Bay Trail");

WHEREAS, the MOU addressed the Parties' collaboration and coordination on the District's permitting and construction of the Ravenswood Bay Trail and the Parties' mutual operation of the Trail as further described therein;

WHEREAS, the MOU also anticipated a future pedestrian trail connection at the northern terminus of Rutgers Street, a City public right-of-way, onto the Bay Trail for access into Ravenswood Open Space Preserve ("District Preserve" or "Preserve");

WHEREAS, the SFPUC has approved a project review certificate submitted by the City with the following project description: "The City of East Palo Alto (project sponsor) proposes to install a pedestrian gate and perform minor paving adjacent to the SFPUC right-of-way (ROW) at Rutgers Street and Tulane Avenue near University Avenue" ("Project"), which is more particularly described in the Agreement below;

WHEREAS, as a condition of such approval of the Project, SFPUC requires a pedestrian gate at the proposed Rutgers Street entrance;

WHEREAS, the Parties have executed that certain Letter Agreement dated March 21, 2024 ("Letter Agreement"), memorializing their agreement concerning the design of the new Rutgers Street Access Point project;

WHEREAS, this Addendum addresses the Parties' agreement concerning the installation, operation and maintenance of the Project following SFPUC approval of the Project design;

NOW, THEREFORE, with reference to the foregoing recitals and in consideration of the promises, obligations and covenants herein contained, the Parties agree as follows:

1. Incorporation of Recitals and Definitions. The Recitals to this Addendum are true and correct and incorporated herein by reference. Any defined terms in this Addendum that are not defined herein shall have the meanings set forth in the MOU.

2. Addendum as Supplement to MOU. This Addendum is intended to supplement the terms of the MOU and the Letter Agreement, and all three agreements will be interpreted consistently to the maximum extent possible. The MOU shall continue to govern the Parties' cooperation and coordination with respect to matters addressed in the MOU, Letter Agreement and this Addendum, except to the extent expressly modified in this Addendum. In the event of an inconsistency between this Addendum and MOU or Letter Agreement, the terms of this Addendum shall control.

3. Project. For purposes of this Addendum, the Project entails the creation of a new public access point to the Bay Trail from Rutgers Street, including the removal and disposal of the existing chain link fence and related improvements and the construction and installation of a new automated trail gate, bioretention planter, District trail signage and grading and paving. The final design and construction plans for the Project have been approved by the City and District, submitted to SFPUC for approval, and are attached hereto Exhibit A and incorporated herein by reference. The Project improvements are located within the City's Rutger's Street right-of-way.

4. Project Implementation**.** The Parties' duties to install/construct, manage and maintain the Project shall be as set forth below. The general intent is for each Party to remain responsible for any improvements or issues that occur on their respective properties (*i.e.*, the District's easement for a segment of the Bay Trail or City's rights-of-way), except as expressly specified herein. The Parties will continue to coordinate on securing permitting approvals from SFPUC for the Project and proceeding with the installation of the Project in accordance with the following:
   A. The estimated budget for the design and installation of the Project is $80,000 - $100,000. The Parties agree to equally share the cost of design and installation of the Project. To the extent that the design and installation of the Project are anticipated to exceed $100,000, District and City will meet and negotiate in good faith prior to the District's commencement of construction of the Project.
   B. Following SFPUC approval, the District will be responsible for procuring a contractor to install the Project in accordance with District processes and requirements. The Parties agree that the District will not be required to obtain any City permits or approvals for the Project. The District will notify the City at least fourteen (14) calendar days prior to the commencement of work at the Project site.
   C. Upon completion of the construction/installation work, District will accept the Project on behalf of itself and the City by issuing a Notice of Acceptance, at

which time the District will invoice the City for one-half of the construction cost.

5. Operation, Maintenance and Repair**.**
   A. City will remain responsible for the management, maintenance and repair of the City rights-of-way in the Project vicinity, including, without limitation, Rutgers Street. Such responsibilities include parking violation enforcement, parking restrictions, street and sidewalk improvements or street signage in connection with the Project as determined in the City's sole discretion. City also will be responsible for responding to inquiries or complaints regarding parking in the vicinity of the Project.
   B. District will be responsible for the management, maintenance and repair of the Bay Trail and the Project improvements. District also shall be responsible for responding to public inquires and complaints regarding the Bay Trail. The District will not be required to obtain permits or approvals from the City for the operation, maintenance and repair of the Project improvements located within the City's Rutgers Street right-of-way, unless the repair or improvement work requires an extended closure of the City's right of way outside the project location.

6. Public Access. The Bay Trail will generally be open for public use at 5 AM to 10 PM and closed outside those hours. The District may temporarily obstruct or restrict public access through the Project site if, in the District's reasonable discretion, it determines that such restrictions are necessary for public safety, research, natural resources protection, trail conditions, maintenance work or other temporary closures necessary to conduct the work of the District in managing the Preserve or Bay Trail. Furthermore, nothing in this Agreement shall be construed to limit the District's right to manage the Preserve at its discretion including the types of uses allowed in the Preserve. However, neither Party shall permanently obstruct or close public pedestrian access at the end of Rutgers Street into the Preserve without that Party having attempted to consult with the other Party, and if an agreement cannot be reached, having thereafter provided a minimum of six months' advance written notice to the other Party.

7. Term. The term of this Addendum will be the same as the MOU and all provisions governing termination or extension in the MOU shall apply to the rights and obligations in this MOU.

8. Authority to Execute Agreement. Each party covenants that the individual executing this Addendum on behalf of the party is a person duly authorized and empowered to execute this Addendum for such party.

9. Indemnity.
   EPA agrees to indemnify, defend and hold harmless District and its and their respective elected and appointed councils, boards, commissions, officers, agents,

contractors and employees from and against any and all actions, suits, claims, liabilities, losses, damages, penalties, obligations and expenses (including but not limited to attorneys' fees and costs) which may arise, directly or indirectly from the acts or omissions of EPA pursuant to this Addendum.

District agrees to indemnify, defend and hold harmless EPA and its and their respective elected and appointed councils, boards, commissions, officers, agents, contractors and employees from and against any and all actions, suits, claims, liabilities, losses, damages, penalties, obligations and expenses (including but not limited to attorneys' fees and costs) which may arise, directly or indirectly from the acts or omissions of District pursuant to this Addendum.

10. Further Actions and Instruments. Each of the Parties shall cooperate and provide reasonable assistance to the other Parties to the extent necessary to implement this Addendum. Upon the request of a party at any time, the other Parties shall promptly execute, with acknowledgement or affidavit if reasonably required, and file or record such required instruments and writings and take any actions as may be reasonably necessary to implement this Addendum.

11. Execution of Agreement; Counterparts. This Addendum may be executed by the Parties in counterparts, each of which when so executed shall be deemed to be an original and all of which taken together shall constitute one and the same agreement.

IN WITNESS WHEREOF, City and District execute this Addendum.

CITY OF EAST PALO ALTO

By: _____ Date: _____

City Manager

Attest: _____ Approved as to form:_____

City Clerk City Attorney

MIDPENINSULA REGIONAL OPEN SPACE DISTRICT

By: _____ Date: _____

General Manager

ATTACHMENT 2

Attest: _____ Approved as to form:_____

District Clerk General Counsel

Attachments:
Exhibit A

EXHIBIT A

PROJECT PLANS

© BKF Engineers

ATTACHMENT 2

MIDPENINSULA REGIONAL OPEN SPACE DISTRICT
RAVENSWOOD BAY TRAIL NEW PEDESTRIAN GATE PROJECT
EAST PALO ALTO, CALIFORNIA
OCTOBER 11, 2024

VICINITY MAP

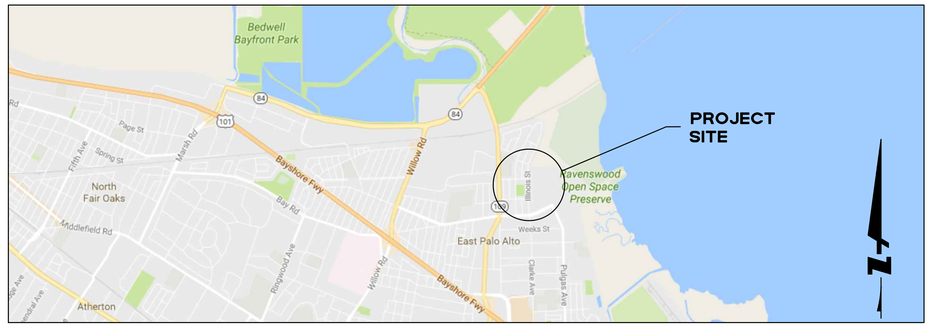

LOCATION MAP

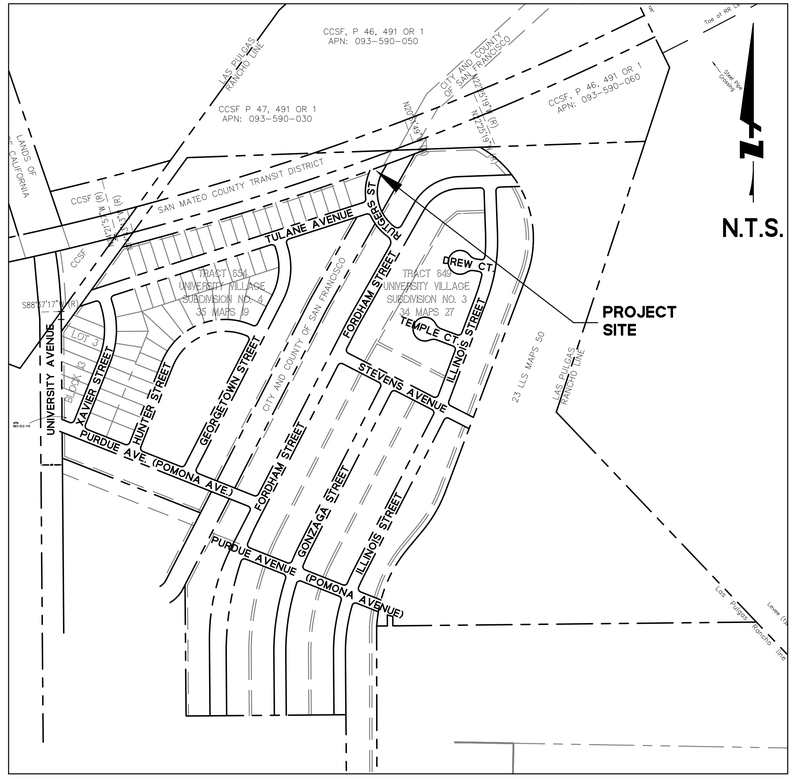

SHEET SCHEDULE

SERIES #	SHEET TITLE
C0.0	TITLE SHEET
C0.1	GENERAL NOTES
C1.0	EXISTING CONDITIONS AND DEMOLITION
C2.0	LAYOUT AND GRADING
C3.0	CONSTRUCTION DETAILS

ABBREVIATIONS

@	AT
ABUT	ABUTMENT
AP	ANGLE POINT
BB	BEGIN BRIDGE
BOT	BOTTOM
CCSF	CITY AND COUNTY OF SAN FRANCISCO
℄	CENTERLINE
CL	CONTROL LINE
DG	DECOMPOSED GRANITE
DIA	DIAMETER
(E)	EXISTING
EB	END BRIDGE
EG	EXISTING GROUND
ELEV	ELEVATION
EQ	EQUIVALENT
FG	FINISHED GROUND
FTG	FOOTING
H	HEIGHT
MIN	MINIMUM
NIC	NOT IN CONTRACT
N.T.S	NOT TO SCALE
OG	ORIGINAL GROUND
(P)	PROPOSED
PED	PEDESTRIAN
PL	PROPERTY LINE
R.O.W.	RIGHT OF WAY
SHDLR	SHOULDER
SFPUC	SAN FRANCISCO PUBLIC UTILITY COMMISSION
SLP	SEE LANDSCAPE PLANS
SMCO	SAN MATEO COUNTY
SSP	SEE STRUCTURAL PLANS
STA	STATION
STD	STANDARD
SWL	STEEL WATER LINE
TW	TOP OF WALL
TYP.	TYPICAL

LEGEND

	PROPOSED	EXISTING
FENCE		
SIGN		
GUY WIRE	NONE	
UTILITY POLE	NONE	
STORM DRAIN INLET	NONE	
EASEMENT LINE		
PROPERTY LINE	NONE	
MAJOR CONTOUR		10
SLOPE	0.00%	0.00%
TREE	NONE	
RAILROAD	NONE	
ALIGNMENT ℄	2+00	NONE

BKF ENGINEERS
255 SHORELINE DRIVE
SUITE 200
REDWOOD CITY, CA 94065
(650) 482-6300
www.bkf.com

MIDPENINSULA REGIONAL OPEN SPACE DISTRICT
RAVENSWOOD BAY TRAIL NEW PEDESTRIAN GATE PROJECT
TITLE SHEET
CITY OF EAST PALO ALTO — SAN MATEO COUNTY — CALIFORNIA

No.	Revisions

Date 10/11/2024
Scale NO SCALE
Design CT
Drawn NG
Approved CT
Job No 20240339

Drawing Number:
C0.0
1 OF 5

FOR REVIEW ONLY - NOT FOR CONSTRUCTION

DRAWING NAME: K:\2024\240339_Ped_Gate_for_the_Ravenswood_Bay_Trail\ENG-L\Sheets\C0.0-Cover.dwg
PLOT DATE: 10-11-24 PLOTTED BY: GBASKAR

© BKF Engineers

ATTACHMENT 2

GENERAL NOTES

1. PROJECT DESCRIPTION:
THE PROPOSED RAVENSWOOD BAY TRAIL NEW PEDESTRIAN GATE PROJECT IS LOCATED GENERALLY EAST OF UNIVERSITY AVENUE, SOUTH OF THE SAN MATEO COUNTY TRANSIT DISTRICT'S DUMBARTON RAILROAD LINE, NORTH OF THE UNIVERSITY VILLAGE RESIDENTIAL NEIGHBORHOOD IN THE CITY OF EAST PALO ALTO, AND WEST OF THE EXISTING SAN FRANCISCO BAY TRAIL IN THE RAVENSWOOD OPEN SPACE PRESERVE IN THE CITY OF MENLO PARK. THE EXISTING TRAIL PROJECT INCLUDES IMPROVEMENTS TO USE A PORTION OF AN EXISTING SFPUC SERVICE ROAD AND CONNECT TO THE EXISTING BAY TRAIL VIA NEW 14' WIDE TRAIL SEGMENT, BRIDGE AND BOARDWALK FOR BICYCLE AND PEDESTRIAN USE. THE PROPOSED PROJECT WILL INCLUDE A NEW PEDESTRIAN GATE ON THE EASTERN RUTGERS STREET SIDEWALK, SOLAR PANEL, GATE OPERATOR, NEW BOLLARD/SIGN, RETENTION AREA, AND AN AC PAVEMENT CONNECTOR FROM EXISTING SIDEWALK TO THE TRAIL.

2. EXISTING TOPOGRAPHY:
THE EXISTING TOPOGRAPHY IS BASED ON AERIAL TOPOGRAPHY SURVEY PERFORMED BY TETRA TECH GEOMATIC TECHNOLOGIES DATED JUNE 23, 2016, AND SUPPLEMENTED WITH AN EXISTING TOPOGRAPHIC SURVEY PERFORMED BY BKF ENGINEERS DATED JULY 27, 2016.

3. BENCHMARK STATEMENT:
A LOCAL SITE BENCHMARK SET USING GPS DERIVED ELEVATIONS BASED UPON THE NORTH AMERICAN VERTICAL DATUM OF 1988 (NAVD 88) WAS USED FOR THIS SURVEY. PER THIS SURVEY, THE MONUMENT USED IS LOCATED ON UNIVERSITY AVENUE WITH A NORTHING OF 2001681.11 AND A EASTING OF 6085894.55.

4. BASIS OF BEARINGS:
THE NORTH AMERICAN DATUM OF 1983 (NAD 83, EPOCH 2007.00) WAS USED AS THE BASIS OF BEARINGS FOR THIS SURVEY.

5. THE FOLLOWING NOTES ARE ESTABLISHED MERELY TO GUIDE THE CONTRACTOR AS TO THE GENERAL ITEMS OF WORK INVOLVED AND ARE NOT INTENDED TO COVER COMPLETE SCOPE OF WORK. CONTRACTOR SHALL COMPLETE ALL WORK AS PER CONTRACT DOCUMENTS.

6. CONSTRUCTION CONTRACTOR AGREES THAT IN ACCORDANCE WITH GENERALLY ACCEPTED CONSTRUCTION PRACTICES, CONSTRUCTION CONTRACTOR WILL BE REQUIRED TO ASSUME SOLE AND COMPLETE RESPONSIBILITY FOR PERSONS AND PROPERTY; THIS REQUIREMENT SHALL BE MADE TO APPLY CONTINUOUSLY AND NOT BE LIMITED TO NORMAL WORKING HOURS. CONTRACTOR FURTHER AGREES TO DEFEND, INDEMNIFY AND HOLD DESIGN PROFESSIONAL HARMLESS FROM ANY AND ALL LIABILITY, REAL OR ALLEGED, IN CONNECTION WITH THE PERFORMANCE OF WORK ON THIS PROJECT, EXCEPTING LIABILITY ARISING FROM THE SOLE NEGLIGENCE OF THE DESIGN PROFESSIONAL.

7. ALL MATERIALS, AND WORK APPURTENANCES SHALL CONFORM WITH THESE PLANS AND THE PROJECT SPECIFICATIONS.

8. THE CONTRACTOR SHALL AT ALL TIMES COMPLY WITH THE RULES AND REGULATIONS ESTABLISHED BY CAL-OSHA AND OTHER AGENCIES HAVING JURISDICTION OVER THE WORK.

9. THE CONTRACTOR IS RESPONSIBLE FOR MATCHING EXISTING ROADWAYS, SURROUNDING LANDSCAPE AND OTHER IMPROVEMENTS WITH A SMOOTH TRANSITION IN PAVING, CURBS, GUTTERS, SIDEWALKS, GRADING, ETC. AND TO AVOID ANY ABRUPT OR APPARENT CHANGES IN GRADES OR CROSS SLOPES, LOW SPOTS OR HAZARDOUS CONDITIONS.

10. IT SHALL BE THE CONTRACTOR'S RESPONSIBILITY TO IMMEDIATELY NOTIFY THE ENGINEER OR DISTRICT REPRESENTATIVE UPON DISCOVERY OF ANY FIELD CONFLICTS.

11. THE CONTRACTOR SHALL BE HELD RESPONSIBLE FOR ANY FIELD CHANGES DONE WITHOUT WRITTEN AUTHORIZATION FROM THE ENGINEER OR DISTRICT REPRESENTATIVE.

12. ANY DEVIATIONS OR CHANGES IN THESE PLANS WITHOUT WRITTEN APPROVAL OF THE ENGINEER OR DISTRICT REPRESENTATIVE SHALL BE AT THE CONTRACTOR'S OWN RISK.

13. PRIOR TO CONSTRUCTION, THE CONTRACTOR SHALL FIELD VERIFY ALL DIMENSIONS SHOWN.

14. THE CITY AND COUNTY OF SAN FRANCISCO ACTING BY AND THROUGH ITS PUBLIC UTILITIES COMMISSION, WATER SUPPLY AND TREATMENT DIVISION ("SFPUC") OWNS AND OPERATES THREE WATER AQUEDUCTS THAT CROSS THE PROJECT ALIGNMENT. THE CONTRACTOR SHALL NOTIFY UNDERGROUND SERVICES ALERT (USA) 48 HOURS BEFORE ANY CONSTRUCTION IN THE VICINITY OF THE SFPUC AQUEDUCTS. IN ADDITION, THE CONTRACTOR SHALL NOTIFY THE SFPUC CONSTRUCTION INSPECTOR, MR. ALBERT HAO, AT (650) 871-3015, AT LEAST TEN (10) CALENDAR DAYS PRIOR TO THE START OF ON-SITE CONSTRUCTION IN THE VICINITY OF THE SFWD ROW. IN THE EVENT OF EMERGENCY INVOLVING SFPUC FACILITIES, THE CONTRACTOR SHALL IMMEDIATELY NOTIFY SFPUC BY CALLING SFPUC MILLBRAE DISPATCH AT 650-872-5900.

15. NO MECHANICAL EXCAVATION IS ALLOWED WITHIN 24 INCHES OF SFPUC PIPELINES. DIGGING WITHIN 24 INCHES OF PIPELINE MUST BE DONE WITH HAND TOOLS. NO VIBRATORY COMPACTION EQUIPMENT SHALL BE USED WITHOUT PRIOR WRITTEN APPROVAL OF THE SFPUC.

16. THE LOCATIONS AND TYPES OF EXISTING UTILITIES SHOWN ON THE PLANS ARE BASED ON INFORMATION FURNISHED BY SERVICING AGENCIES AND FIELD SURVEY. IT IS THE CONTRACTOR'S RESPONSIBILITY TO FIELD VERIFY THE POSITION OF AND PROVIDE PROTECTION FOR SUCH UTILITIES AND STRUCTURES, WHETHER SHOWN ON THE PLAN OR NOT.

17. ELEVATIONS AND LOCATIONS OF ALL EXISTING UTILITY CROSSINGS SHALL BE VERIFIED BY THE CONTRACTOR PRIOR TO START OF ANY CONSTRUCTION AFFECTING SAID LINES. CONTACT USA AT (800) 642-2444 AT LEAST TWO WORKING DAYS PRIOR TO EXCAVATION.

18. ELEVATIONS AND LOCATIONS OF ALL EXISTING SFPUC LINES SHALL BE VERIFIED BY THE CONTRACTOR PRIOR TO START OF ANY CONSTRUCTION AFFECTING SAID LINES. CONTACT SFPUC AT (415) 944-2442 PRIOR TO EXCAVATION.

19. MAXIMUM EXTERNAL LOADING OVER SFPUC PIPELINE IS AASHTO H-10 LOADING WITH A MINIMUM OF 3 FEET SOIL COVER (OR H-20 LOADING WITH A MINIMUM OF 4 FEET SOIL COVER). IF LOADING CONDITION EXCEEDS ABOVE, ENGINEERING CALCULATIONS AS SHOWN IN AWWA, M9 MUST BE SUBMITTED TO THE SFPUC TO SHOW THAT PROPOSED CONDITION WOULD IMPOSE A LOAD OF LESS THAN 500 PSF ONTO THE PIPELINE.

20. CONTRACTOR SHALL CONFINE HIS OPERATIONS AND ACTIVITIES WITHIN THE PROJECT LIMITS, CONSISTING OF ROAD RIGHT-OF-WAY, UTILITY EASEMENTS, AND/OR PROJECT CONFORMS, AS SHOWN ON THE PLANS.

21. THE CONTRACTOR SHALL RESTORE ALL DAMAGED, REMOVED OR OTHERWISE DISTURBED WALLS, FENCES, SERVICES, UTILITIES, IMPROVEMENTS OR FEATURES OF WHATEVER NATURE, DUE TO CONTRACTOR'S WORK. SEPARATE PAYMENT FOR RESTORATION OF EXISTING IMPROVEMENTS TO THEIR ORIGINAL CONDITION WILL NOT BE MADE. COMPENSATION FOR THIS TASK SHALL BE CONSIDERED AS INCLUDED IN THE VARIOUS CONTRACT ITEMS OF WORK INVOLVED.

22. VEGETATION AND IMPROVEMENTS SHALL BE REMOVED ONLY WHEN DIRECTED IN WRITING BY THE ENGINEER OR DISTRICT REPRESENTATIVE. NO TREES, VEGETATION, OR IMPROVEMENTS (INCLUDING FENCES) SHALL BE REMOVED WITHOUT PRIOR WRITTEN CONSENT AND APPROVAL OF THE ENGINEER OR DISTRICT REPRESENTATIVE.

23. PLANT PATHOGEN MANAGEMENT: TO PREVENT THE SPREAD OF PLANT PATHOGENS, CLEAN ALL EQUIPMENT AND FOOTWEAR PRIOR TO ENTERING THE SITE. FOR FURTHER REQUIREMENTS REFER TO MROSD GUIDELINES FOR MINIMIZING PYTHOPHTHORA CONTAMINATION.

24. CONSTRUCTION WATER SHALL BE PROVIDED BY THE CONTRACTOR. REFER TO SUPPLEMENTAL CONDITIONS FOR MORE INFORMATION.

25. CONSTRUCTION SEASONAL RESTRICTION: CONSTRUCTION IS ONLY PERMITTED BETWEEN SEPTEMBER 1ST AND JANUARY 31ST ON THE EAST SIDE OF THE SEASONAL RESTRICTION BOUNDARY INDICATED ON THE PLANS.

SURVEYING

THE CONTRACTOR SHALL BE RESPONSIBLE FOR ALL PROJECT CONSTRUCTION SURVEYING, INCLUDING ESTABLISHING ALL LINES AND GRADES REQUIRED FOR THE COMPLETION OF THE WORK. NO LINES AND/OR GRADES WILL BE SET BY THE DISTRICT.

THE DISTRICT RESERVES THE RIGHT TO CHECK THE CONTRACTOR'S WORK AT ANY TIME DURING THE PROJECT. CHECKS PERFORMED BY THE DISTRICT WILL NOT RELIEVE THE CONTRACTOR OF RESPONSIBILITY TO PROPERLY LOCATE AND CONSTRUCT THE WORK IN ACCORDANCE WITH THE PLANS AND SPECIFICATIONS.

EXISTING SURVEY MONUMENTS LOCATED ADJACENT TO AND OUTSIDE OF CONSTRUCTION AREAS SHALL BE ADEQUATELY PROTECTED FROM ANY DAMAGE THAT MAY RESULT FROM THE CONTRACTOR'S OPERATIONS. ALL SURVEY MONUMENTS DAMAGED OR DISPLACED BY THE CONTRACTOR SHALL BE REPLACED IN ACCORDANCE WITH THE PROVISIONS OF THE LAND SURVEYOR'S ACT, CODE OF THE STATE OF CALIFORNIA, AT THE CONTRACTOR'S EXPENSE. THE CONTRACTOR SHALL IMMEDIATELY NOTIFY THE DISTRICT'S REPRESENTATIVE IF ANY SURVEY MONUMENT IN THE WORK AREA IS ACCIDENTALLY DISTURBED OR DAMAGED.

SFPUC NOTES

1. THE CITY AND COUNTY OF SAN FRANCISCO ACTING BY AND THROUGH ITS PUBLIC UTILITIES COMMISSION, WATER SUPPLY AND TREATMENT DIVISION ("SFPUC") OWNS AND OPERATES THREE WATER AQUEDUCTS THAT CROSS THE PROJECT ALIGNMENT. THE CONTRACTOR SHALL NOTIFY UNDERGROUND SERVICES ALERT (USA) 48 HOURS BEFORE ANY CONSTRUCTION IN THE VICINITY OF THE SFPUC AQUEDUCTS. IN ADDITION, THE CONTRACTOR SHALL NOTIFY THE SFPUC CONSTRUCTION INSPECTOR, MR. ALBERT HAO, AT (650) 871-3015, AT LEAST TEN (10) CALENDAR DAYS PRIOR TO THE START OF ON-SITE CONSTRUCTION IN THE VICINITY OF THE SFWD ROW. IN THE EVENT OF EMERGENCY INVOLVING SFPUC FACILITIES, THE CONTRACTOR SHALL IMMEDIATELY NOTIFY SFPUC BY CALLING SFPUC MILLBRAE DISPATCH AT 650-872-5900.

2. NO MECHANICAL EXCAVATION IS ALLOWED WITHIN 24 INCHES OF SFPUC PIPELINES. DIGGING WITHIN 24 INCHES OF PIPELINES MUST BE DONE WITH HAND TOOL. NO VIBRATORY COMPACTION EQUIPMENT SHALL BE USED WITHOUT PRIOR WRITTEN APPROVAL OF THE SFPUC.

3. CONTRACTOR SHALL OBTAIN CONSENT FROM THE SFPUC TO POTHOLE SFPUC PIPELINE TO DETERMINE THE PIPE DEPTH PRIOR TO ANY EXCAVATION. THE POTHOLING SHALL BE CARRIED OUT BY SOIL VACUUM EXTRACTION METHOD.

4. MAXIMUM EXTERNAL LOADING OVER SFPUC PIPELINE IS AASHTO H-10 LOADING WITH A MINIMUM OF 3 FEET SOIL COVER (OR H-20 LOADING WITH A MINIMUM OF 4 FEET SOIL COVER). IF LOADING CONDITION EXCEEDS ABOVE, ENGINEERING CALCULATIONS AS SHOWN IN AWWA, M9 MUST BE SUBMITTED TO THE SFPUC TO SHOW THAT PROPOSED CONDITION WOULD IMPOSE A LOAD OF LESS THAN 500 PSF ONTO THE PIPELINE.

BKF ENGINEERS
255 SHORELINE DRIVE
SUITE 200
REDWOOD CITY, CA 94065
(650) 482-6300
www.bkf.com

MIDPENINSULA REGIONAL OPEN SPACE DISTRICT
RAVENSWOOD BAY TRAIL NEW PEDESTRIAN GATE PROJECT
GENERAL NOTES
CITY OF EAST PALO ALTO SAN MATEO COUNTY CALIFORNIA

No.	Revisions

Date 10/11/2024
Scale NO SCALE
Design CT
Drawn NG
Approved CT
Job No 20240339

Drawing Number:
CO.1
2 OF 5

FOR REVIEW ONLY - NOT FOR CONSTRUCTION

DRAWING NAME: K:\2024\240339_Ped_Gate_for_the_Ravenswood_Bay_Trail\ENG-L\Sheets\CO.0-Cover.dwg
PLOT DATE: 11-22-24 PLOTTED BY: tran

© BKF Engineers

ATTACHMENT 2

LEGENDS:

LIMIT OF DEMOLITION

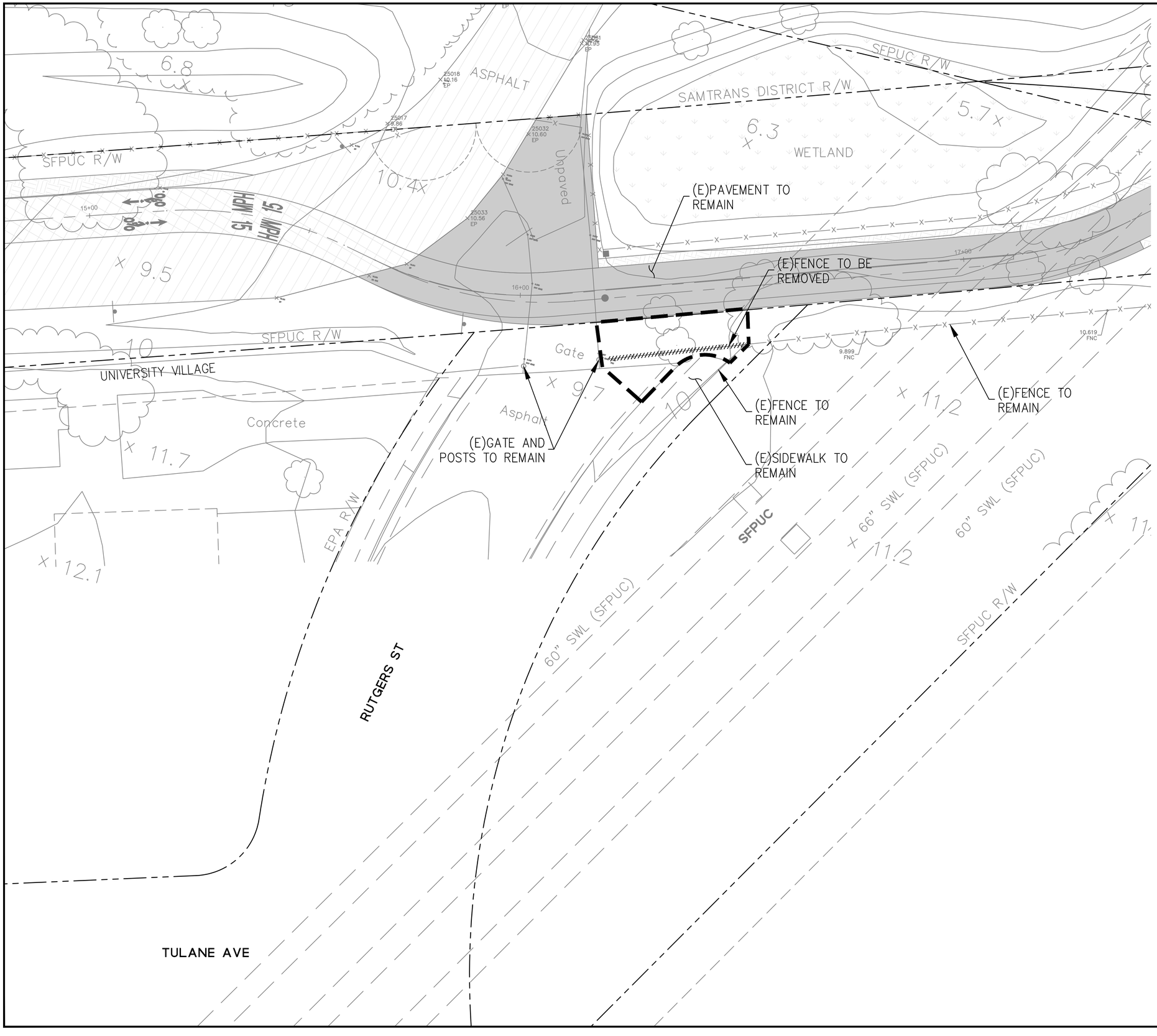

BKF ENGINEERS
255 SHORELINE DRIVE
SUITE 200
REDWOOD CITY, CA 94065
(650) 482-6300
www.bkf.com

MIDPENINSULA REGIONAL OPEN SPACE DISTRICT
RAVENSWOOD BAY TRAIL NEW PEDESTRIAN GATE PROJECT
EXISTING CONDITIONS AND DEMOLITION

CITY OF EAST PALO ALTO — SAN MATEO COUNTY — CALIFORNIA

No.	Revisions

Date 10/11/2024
Scale 1:10
Design CT
Drawn NG
Approved CT
Job No 20240339

Drawing Number:
C1.0
3 OF 5

FOR REVIEW ONLY - NOT FOR CONSTRUCTION

DRAWING NAME: C:\Temp\AcPublish_11404\C1.0-DEMO.dwg
PLOT DATE: 10-11-24 PLOTTED BY: GBASKAR

© BKF Engineers

ATTACHMENT 2

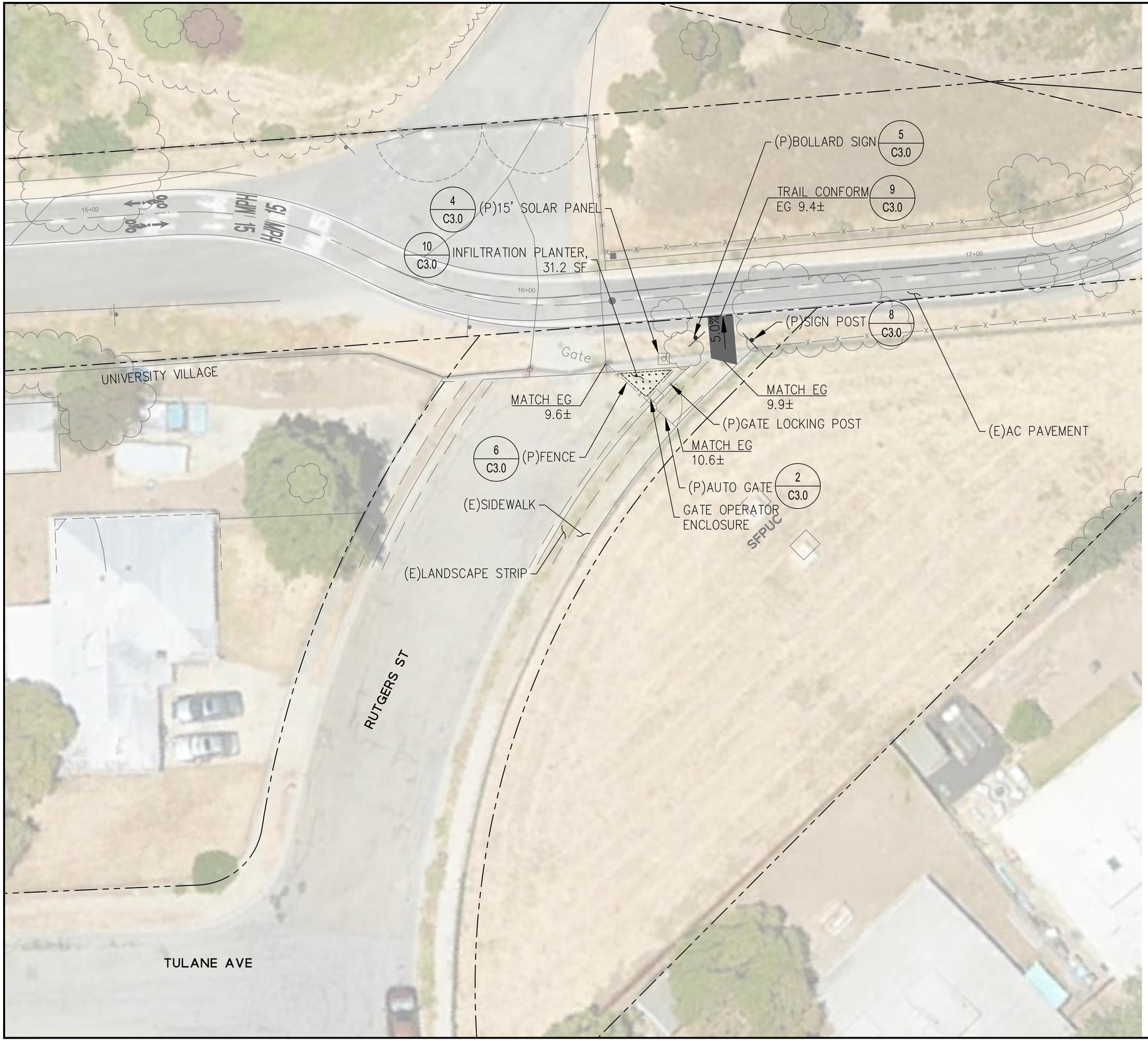

LEGENDS:

3.0" AC OVER 6" CLASS II AB

GRAPHIC SCALE

(IN FEET)
1 inch = 10 ft.

BKF ENGINEERS
255 SHORELINE DRIVE
SUITE 200
REDWOOD CITY, CA 94065
(650) 482-6300
www.bkf.com

MIDPENINSULA REGIONAL OPEN SPACE DISTRICT
RAVENSWOOD BAY TRAIL NEW PEDESTRIAN GATE PROJECT
LAYOUT AND GRADING PLAN

CITY OF EAST PALO ALTO — SAN MATEO COUNTY — CALIFORNIA

No.	Revisions

Date 10/11/2024
Scale 1:10
Design CT
Drawn NG
Approved CT
Job No 20240339

Drawing Number:
C2.0
4 OF 5

FOR REVIEW ONLY - NOT FOR CONSTRUCTION

DRAWING NAME: C:\Temp\AcPublish_11404\C2.0-Layout.dwg
PLOT DATE: 10-11-24 PLOTTED BY: GBASKAR

© BKF Engineers

NOTES:

1. SUBMIT SHOP DRAWINGS PRIOR TO FABRICATION.

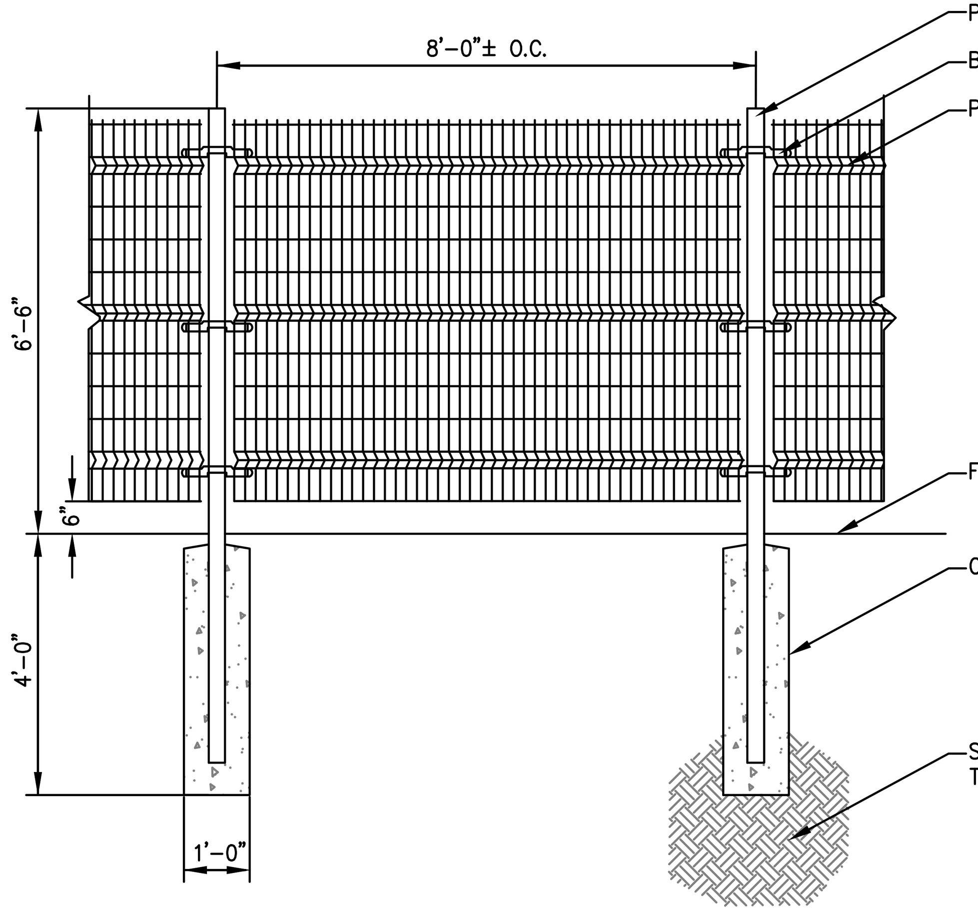

1 PROPERTY FENCE

NTS

NOTES:

1. SUBMIT SHOP DRAWINGS PRIOR TO FABRICATION.
2. ALL METAL TO BE HOT-DIPPED GALVANIZED.
3. PAINT ALL CUSTOM COMPONENTS PRIOR TO FABRICATION. COLOR TO MATCH FENCE PANEL
4. CUSTOM OPENING IN GATE PANEL TO BE PROVIDED BY FENCE MANUFACTURER PRIOR TO APPLICATION OF PROTECTIVE COATING. ALL OPENINGS TO HAVE SMOOTH EDGES.

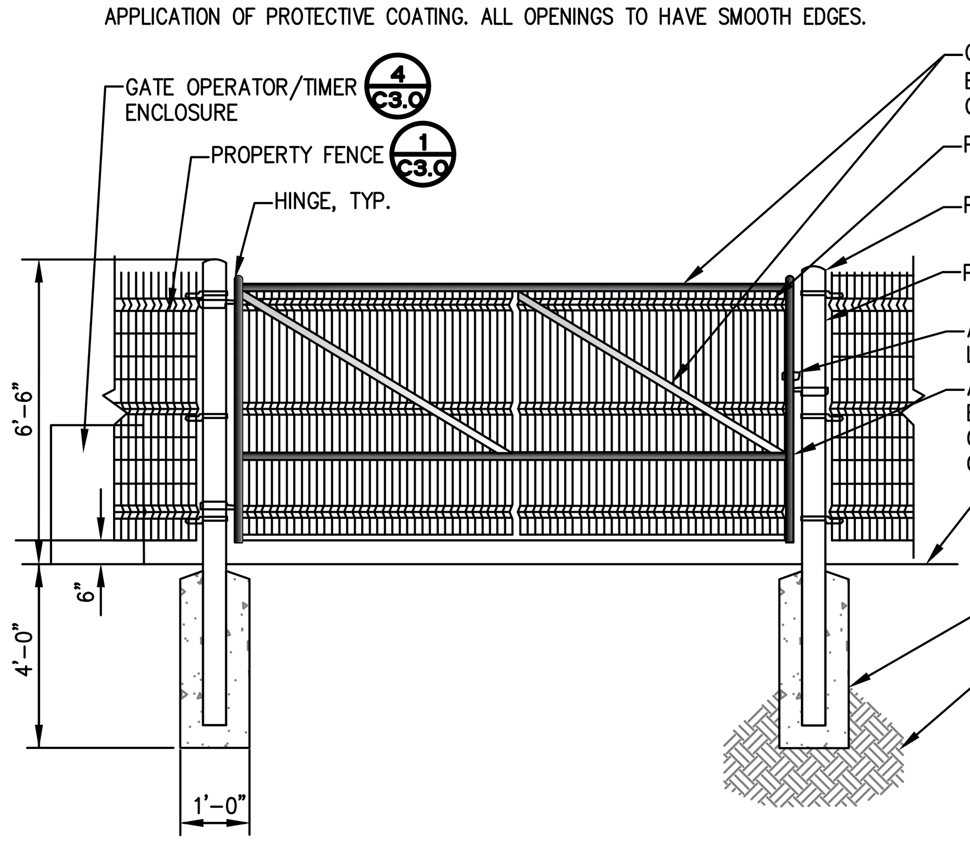

2 AUTOMATIC TRAIL GATE

NTS

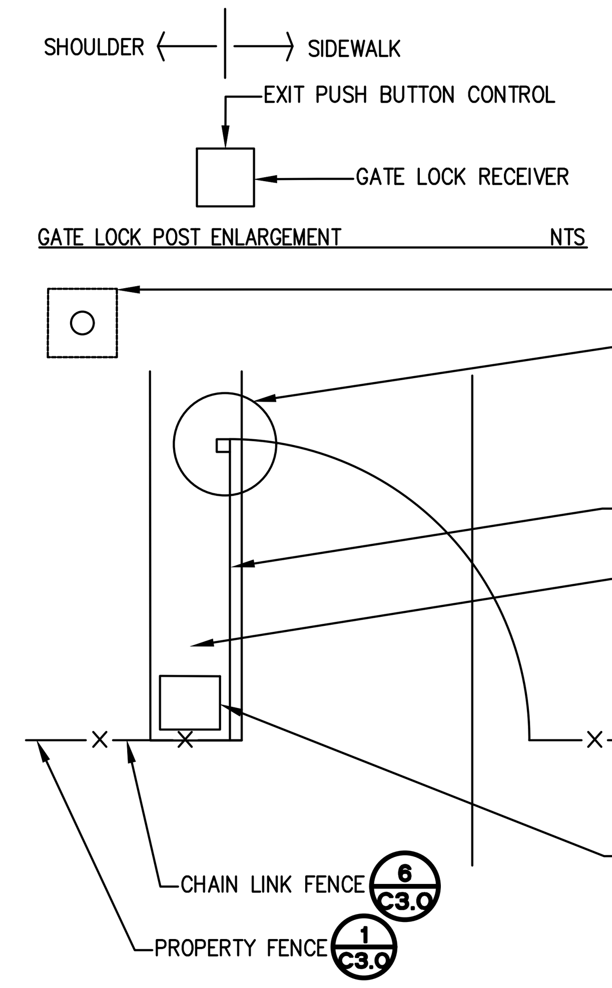

3 AUTOMATIC TRAIL GATE AT SERVICE ROAD

NTS

NOTES:

1. SUBMIT SHOP DRAWINGS PRIOR TO FABRICATION
2. FOR ALL CONDUIT SHOWN, PROVIDE AN ADDITIONAL EMPTY CONDUIT IN PARALLEL FOR FUTURE USE.

* MOUNT ONTO CONCRETE PAD.

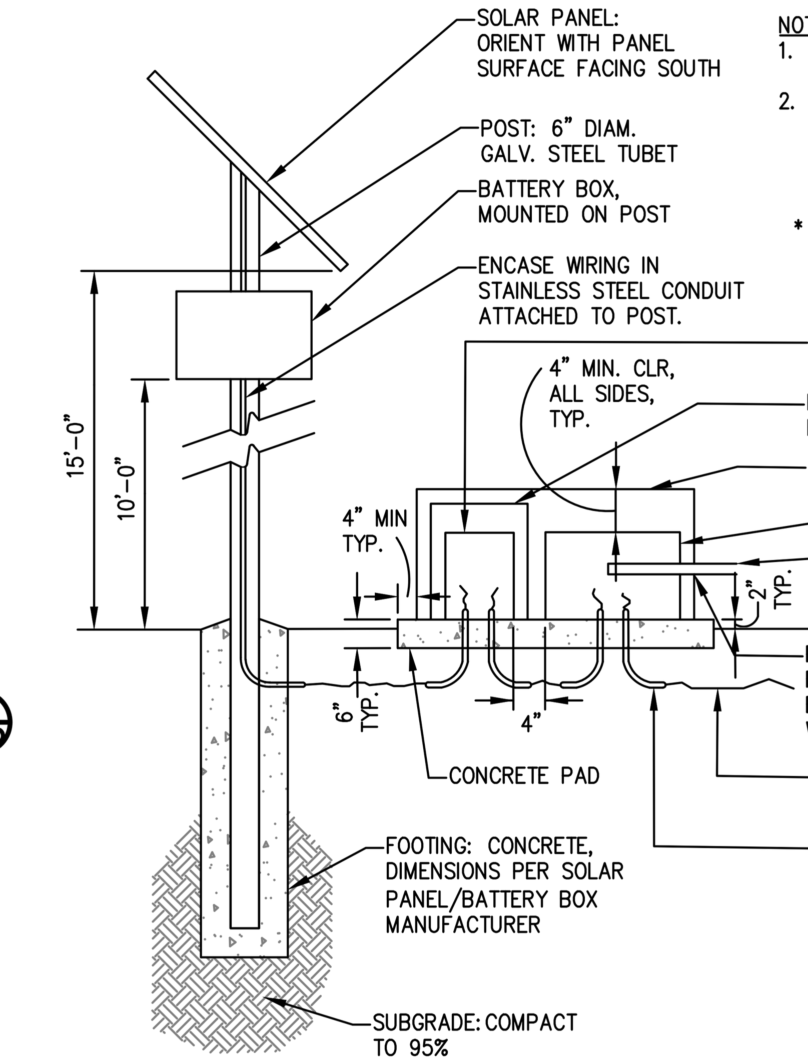

4 SOLAR PANEL AND GATE OPERATOR

NTS

NOTES:

1. CONTACT SAN FRANCISCO BAY TRAIL TO ACQUIRE DIGITAL IMAGERY FOR SIGN PANELS.
2. SUBMIT SHOP DRAWINGS TO DISTRICTS REPRESENTATIVE FOR APPROVAL PRIOR TO SIGN PANEL FABRICATION.
3. SIGN PANELS SHALL BE IN FULL COLOR PER BAY TRAIL STANDARDS.
4. ADD HI-CON BLACK TO CONCRETE AT A RATE OF 1/8 LB PER SACK OF CEMENT TO PRODUCE A LIGHT GRAY COLOR.
5. SIGN PANELS TO ORIENTED PARALLEL WITH DIRECTION OF TRAVEL ALONG TRAIL.
6. CONSTRUCT ONE BAY TRAIL DESIGNATION SIGN COMPLETE IN PLACE AND REVIEW WITH DISTRICT FOR APPROVAL PRIOR TO CONSTRUCTING ADDITIONAL SIGNS. CORRECT DEFICIENCIES INDICATED BY DISTRICT. ALL SUBSEQUENT SIGNS SHALL EQUAL QUALITY OF APPROVED SIGN.

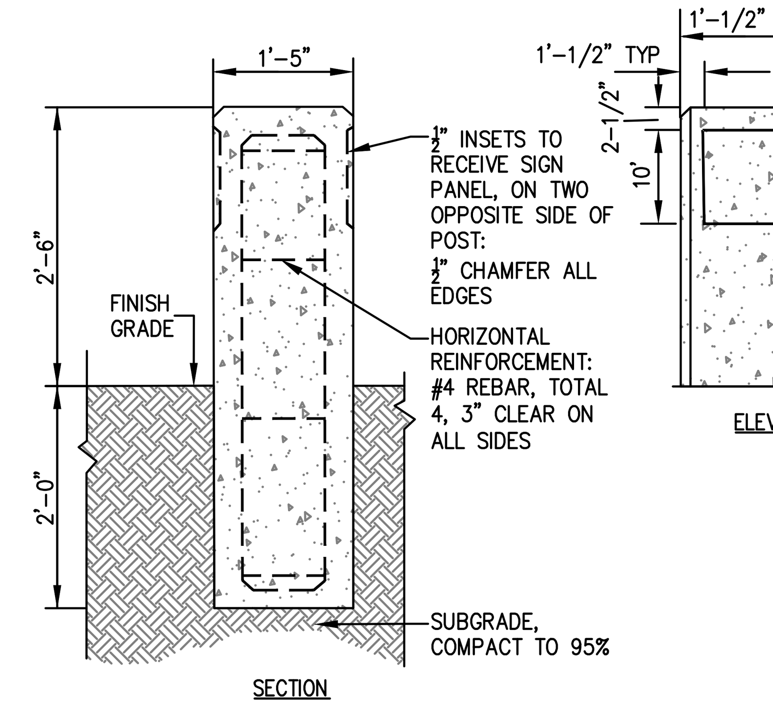

5 BAY TRAIL DESIGNATION SIGN

NTS

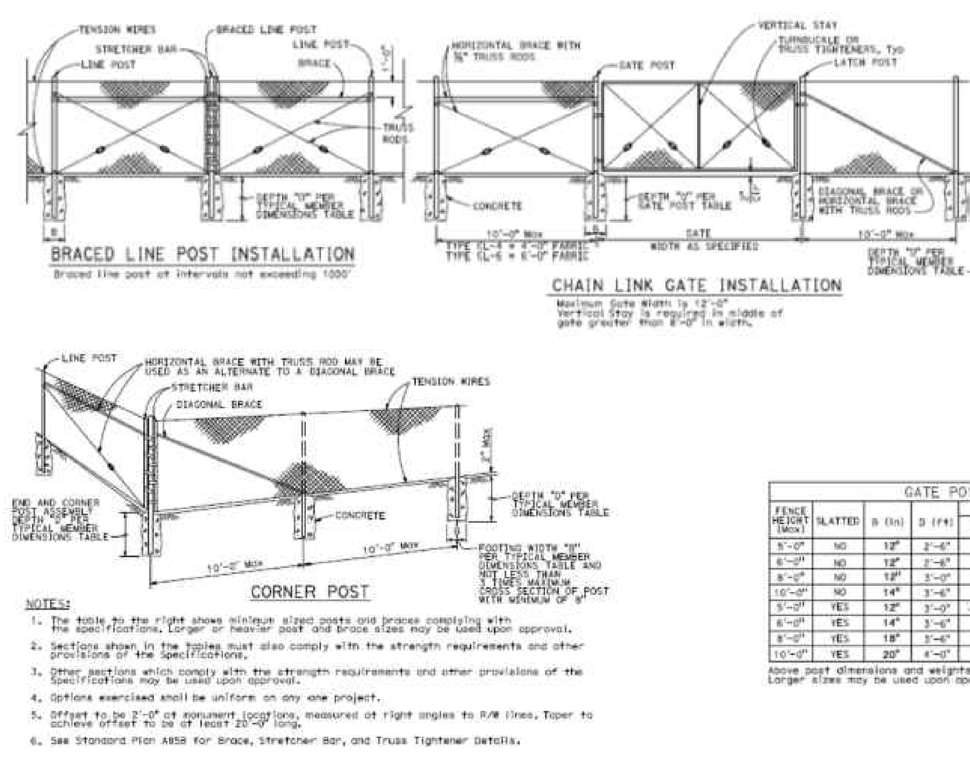

NOTES:

1. The table to the right shows minimum sized posts and braces complying with the specifications. Larger or heavier post and brace sizes may be used upon approval.
2. Sections shown in the tables must also comply with the strength requirements and other provisions of the Specifications.
3. Other sections which comply with the strength requirements and other provisions of the Specifications may be used upon approval.
4. Options exercised shall be uniform on any one project.
5. Offset to be 2'-0" at monument locations, measured at right angles to R/W lines. Taper to achieve offset to be at least 20'-0" long.
6. See Standard Plan A85B for Brace, Stretcher Bar, and Truss Tightener Details.

GATE POST

FENCE HEIGHT (Max)	SLATTED	B (in)	D (ft)	ROUND PIPE		
				SECTION	ROUND OD PIPE	WEIGHT (lb/ft)
5'-0"	NO	12"	2'-6"	3 Std	3.50"	7.58
6'-0"	NO	12"	2'-6"	3 Std	3.50"	7.58
8'-0"	NO	12"	3'-0"	3 Std	3.50"	7.58
10'-0"	NO	14"	3'-6"	3 Std	3.50"	7.58
5'-0"	YES	12"	3'-0"	3½ Std	4.00"	9.12
6'-0"	YES	14"	3'-6"	4 Std	4.50"	10.80
8'-0"	YES	18"	3'-6"	5 Std	5.56"	14.60
10'-0"	YES	20"	4'-0"	6 Std	6.63"	19.00

Above post dimensions and weights are minimums. Larger sizes may be used upon approval.

TYPICAL MEMBER DIMENSIONS (See Notes)

FENCE HEIGHT (Max)	SLATTED	B (in)	D (ft)	LINE POSTS					BRACES				
				ROUND PIPE			ROLL FORMED		ROUND PIPE			ROLL FORMED	
				SECTION	ROUND OD PIPE	WEIGHT (lb/ft)	SECTION	WEIGHT (lb/ft)	SECTION	ROUND OD PIPE	WEIGHT (lb/ft)	SECTION	WEIGHT (lb/ft)
5'-0"	NO	8"	2'-6"	1½ Std	1.90"	2.72	1.875" x 1.625"	1.85	1½" Std	1.90"	2.72	1.625" x 1.250"	1.35
6'-0"	NO	10"	2'-6"	2 Std	2.38"	3.66	1.875" x 1.625"	2.40	2 Std	2.38"	3.66	1.625" x 1.250"	1.35
8'-0"	NO	12"	3'-0"	2½ Std	2.88"	5.80	3.250" x 2.500"	4.50	2 Std	2.38"	3.66	1.625" x 1.250"	1.35
10'-0"	NO	14"	3'-6"	3 Std	3.50"	7.58	3.250" x 2.500"	4.50	2½ Std	2.88"	5.80	1.625" x 1.250"	1.35
5'-0"	YES	12"	3'-0"	3½ Std	4.00"	9.12	N/A	-	2 Std	2.38"	3.66	N/A	-
6'-0"	YES	14"	3'-0"	4 Std	4.50"	10.80	N/A	-	2 Std	2.38"	3.66	N/A	-
8'-0"	YES	18"	3'-6"	5 Std	5.56"	14.60	N/A	-	2 Std	2.38"	3.66	N/A	-
10'-0"	YES	20"	4'-0"	6 Std	6.63"	19.00	N/A	-	2½ Std	2.88"	5.80	N/A	-

FOR REFERENCE ONLY
REFER TO LATEST VERSION OF CALTRANS STANDARDS FOR COMPLETE DETAIL INFORMATION.

6 CHAIN LINK FENCE

NTS

NOTES:

1. SUBMIT SHOP DRAWINGS PRIOR TO FABRICATION.
2. ALL METAL TO BE HOT-DIPPED GALVANIZED.
3. PAINT ALL COMPONENTS PRIOR TO FABRICATION. COLOR TO MATCH PROPERTY FENCE.

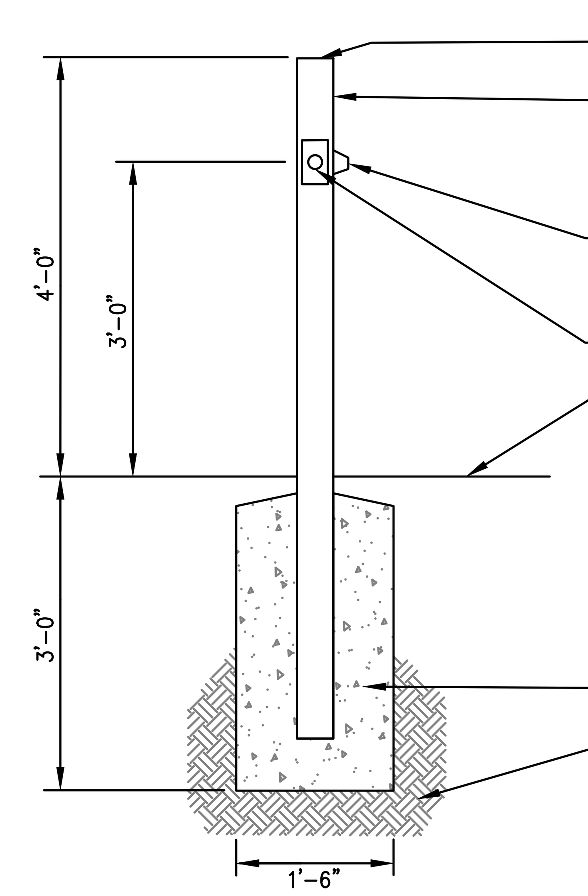

7 GATE LOCKING POST

NTS

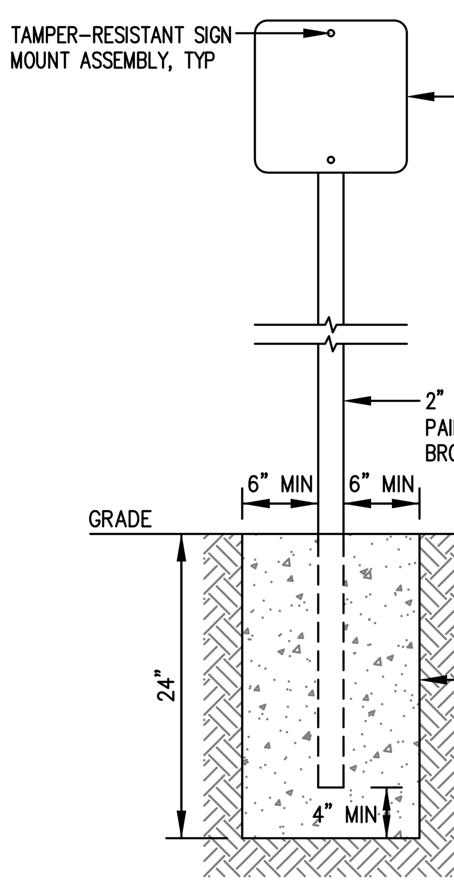

8 ROADSIDE SIGN POST DETAIL

NTS

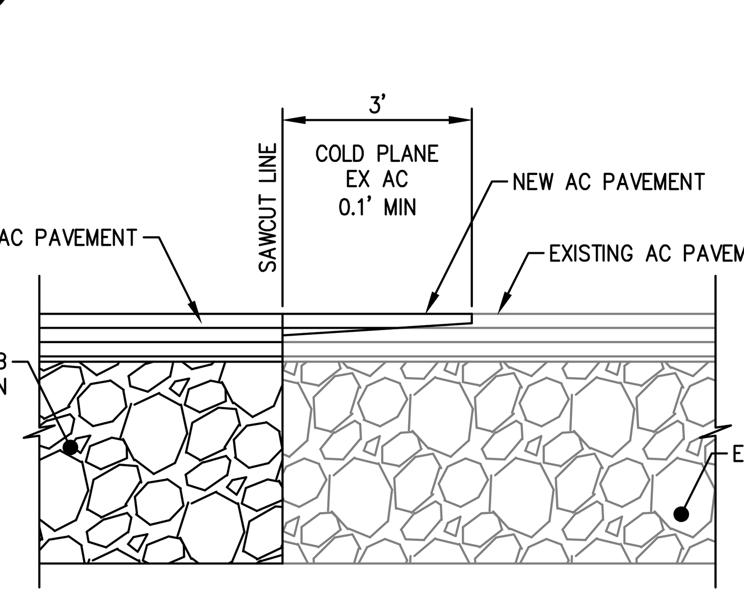

9 PAVEMENT CONFORM

NTS

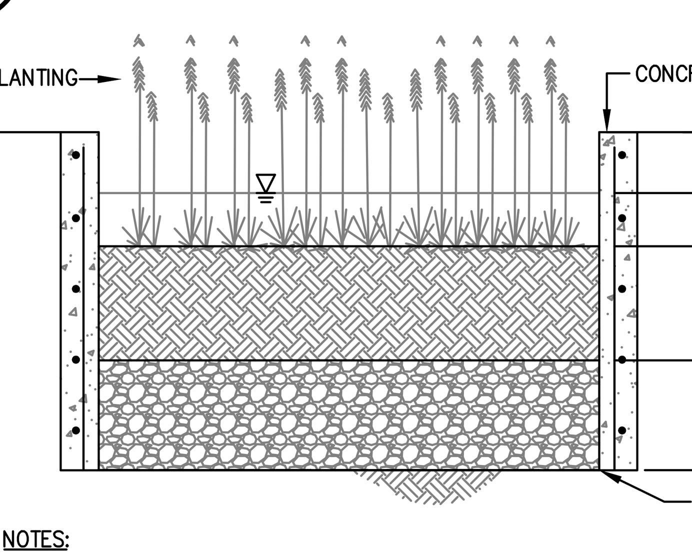

NOTES:

1. BIORETENTION SOIL MEDIA PER SAN MATEO COUNTY C.3 TECHNICAL GUIDANCE, VERSION 5.0, APPENDIX K, ENTITLED "BIORETENTION SOIL MIX SPECIFICATIONS", DATED JUNE 2016.

10 INFILTRATION PLANTER

NTS

11 PRESERVE REGULATION SIGN PANEL

NTS

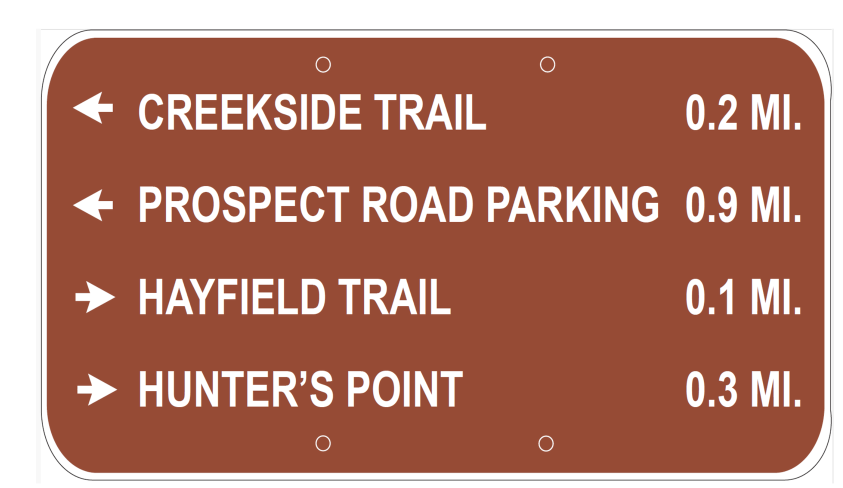

12 DIRECTIONAL SIGN PANEL

NTS

BKF ENGINEERS
255 SHORELINE DRIVE
SUITE 200
REDWOOD CITY, CA 94065
(650) 482-6300
www.bkf.com

MIDPENINSULA REGIONAL OPEN SPACE DISTRICT
RAVENSWOOD BAY TRAIL NEW PEDESTRIAN GATE PROJECT
CONSTRUCTION DETAILS

CITY OF EAST PALO ALTO SAN MATEO COUNTY CALIFORNIA

No.	Revisions

Date 10/11/2024
Scale NO SCALE
Design CT
Drawn NG
Approved CT
Job No 20240339

Drawing Number:
C3.0
5 OF 5

FOR REVIEW ONLY - NOT FOR CONSTRUCTION

DRAWING NAME: K:\2024\240339_Ped_Gate_for_the_Ravenswood_Bay_Trail\ENG-L\Sheets\C3.0-CD.dwg
PLOT DATE: 10-11-24 PLOTTED BY: GBASKAR